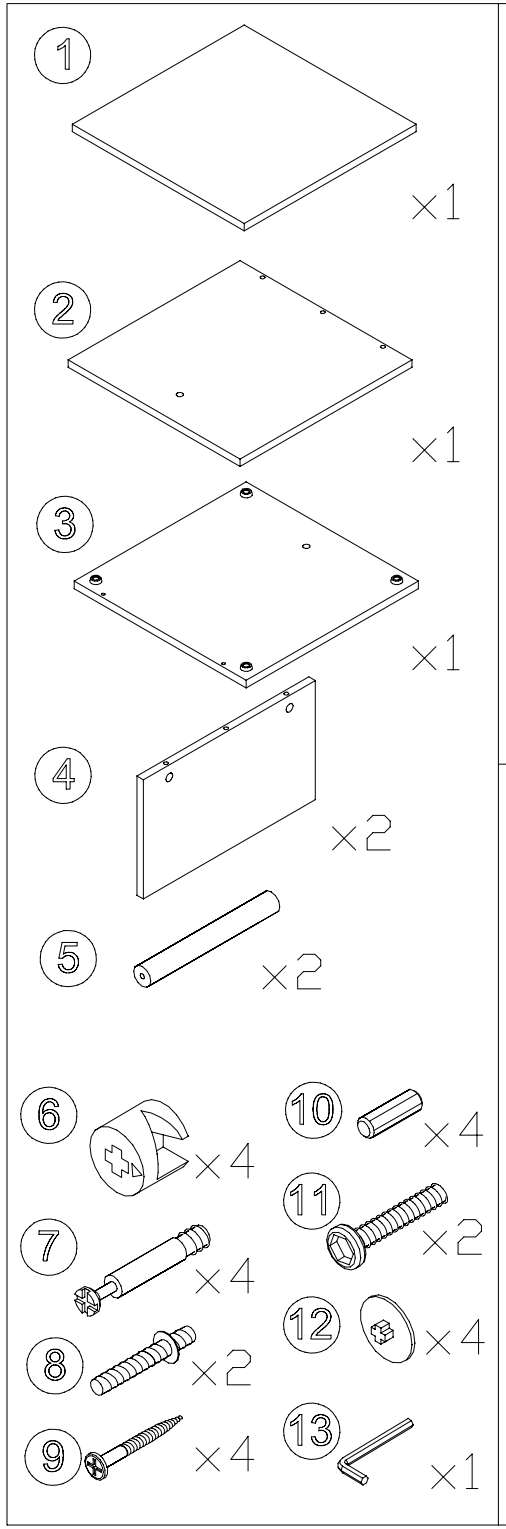

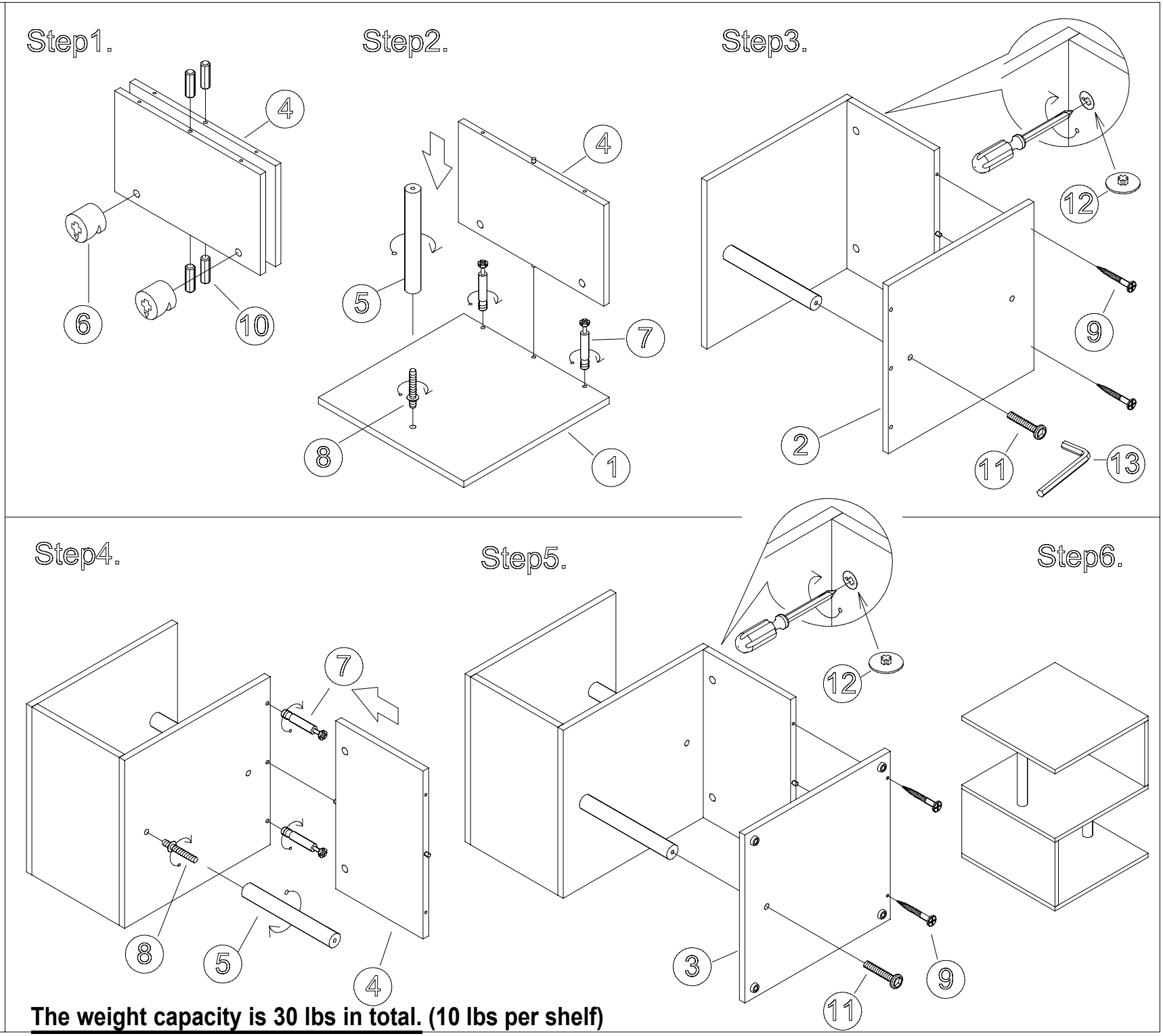

The weight capacity is 30 lbs in total. (10 lbs per shelf)