ZHF2309 Side C-Table

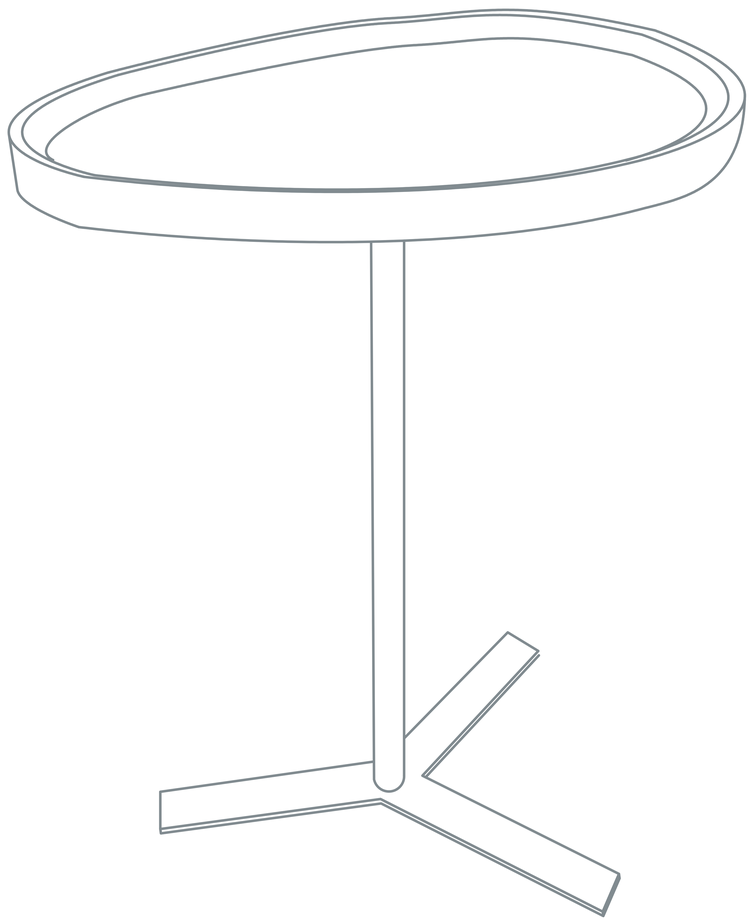

Ax1	Bx1	Cx1	
Dx1	Ex4	Fx1	Gx1

Step 1

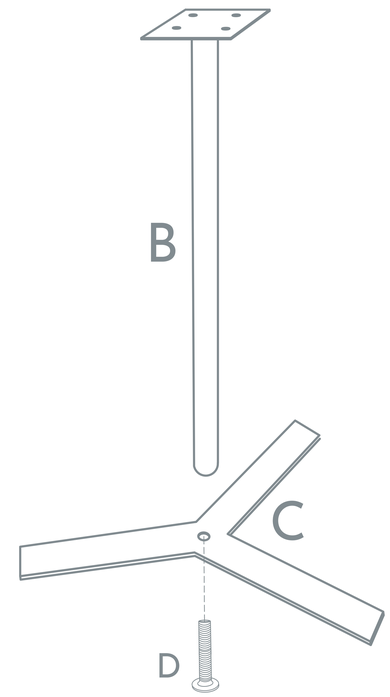

Use the Hex Key (G) and Screw (D) fasten the Leg (B) to the Base (C).

Step 2

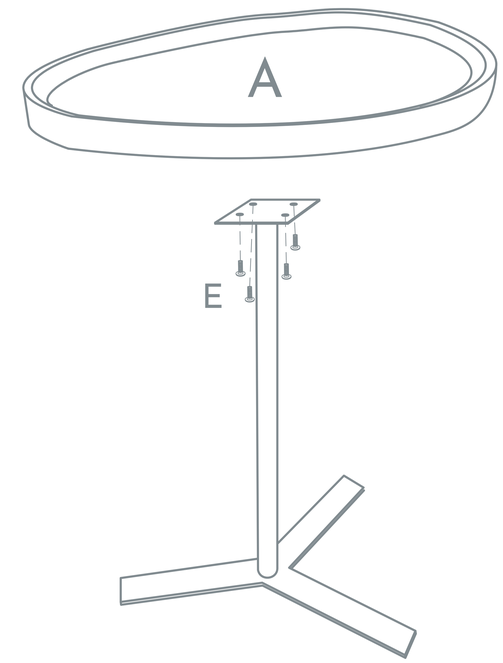
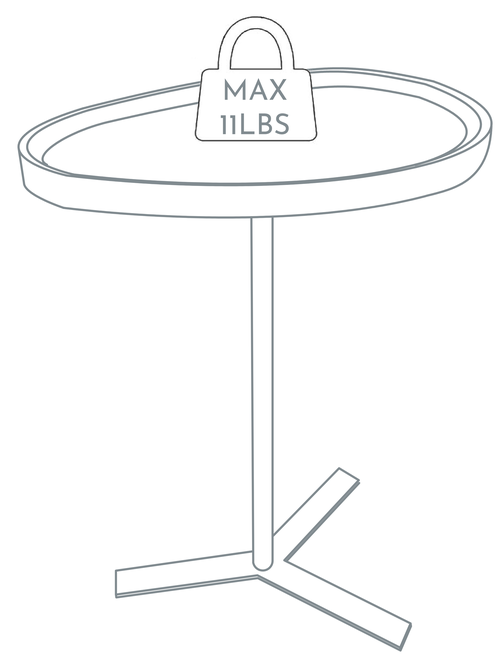
And finally, using the other Hex Key (F) and other Screws (E), attach the Table Top (A) to the Leg (B) on the assembled frame.