ZHF2322 Coffee Table Set

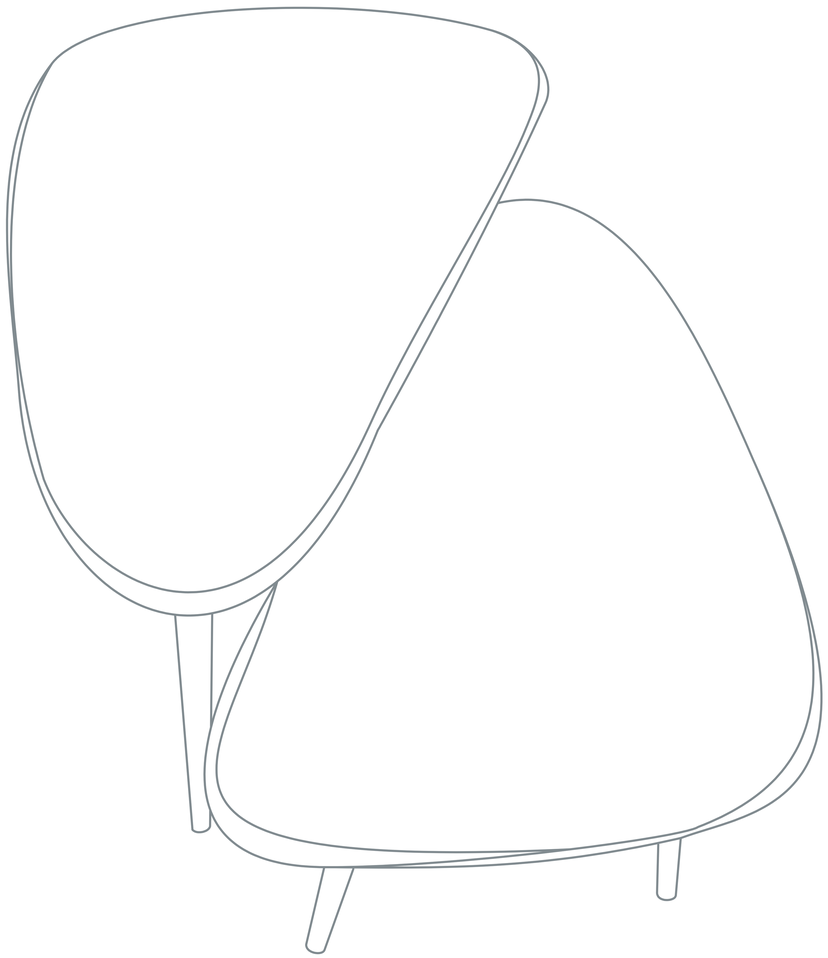

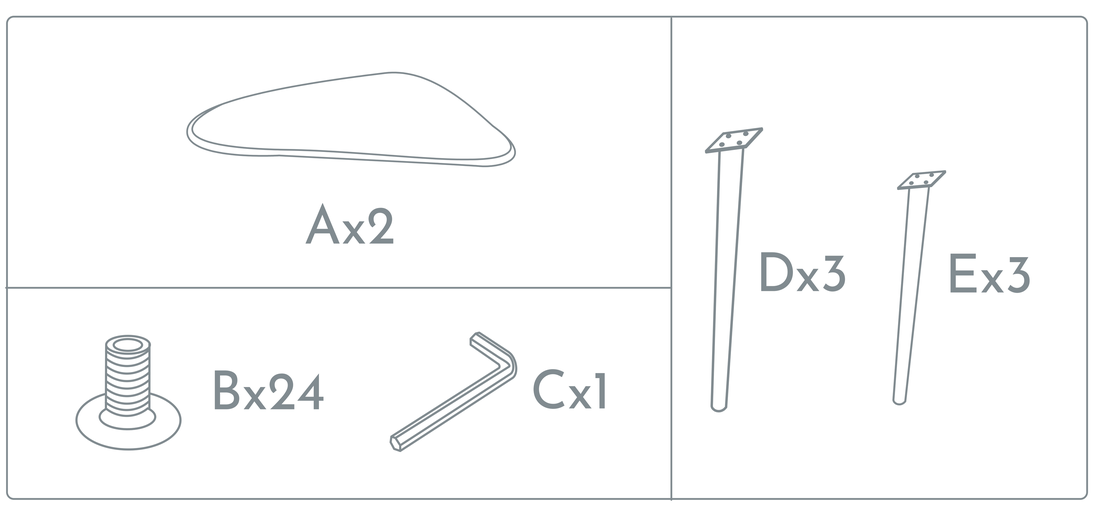

Step 1

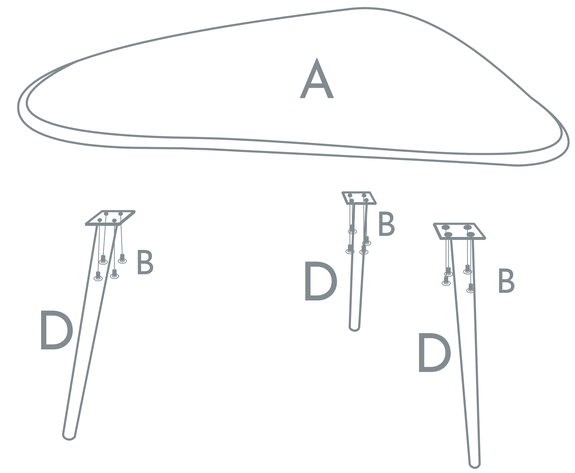

Using the Hex Key (C) and Screws (B), fasten the Legs (D) to the Table Top (A).

Step 2

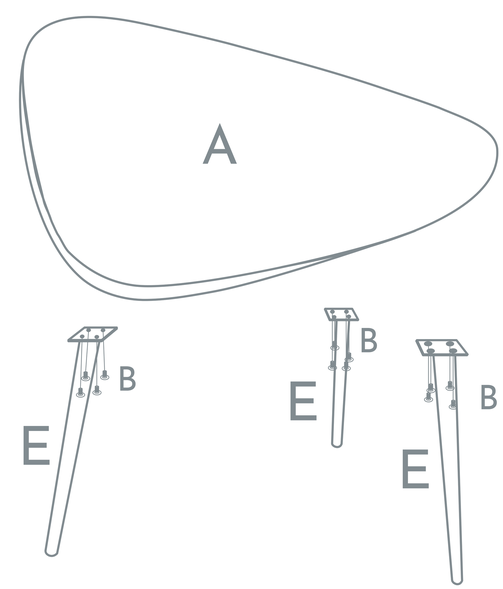

Using the Hex Key (C) and Screws (B), fasten the Legs (E) to the Table Top (A).

Maximum Weight Capacity: 31 lbs. Per Table